KOSO Feel The Speed

INSTRUCTIONS

Thank you for purchasing our product. Before installing/operating the product, read the instructions carefully and retain them for future reference.

⚠ Attention!

- For installation, follow the steps described below. Any damage caused by wrong installation shall be imputed to the users.
- To avoid a short circuit from occurring, do not pull or modify the wires during installation.
- Do not disassemble or change any parts. Opening and dissassembling this unit will void any warranty.
- Maintenance and repairs should be executed by our professionals only.

NOTE

⚠ Some procedures must be followed to avoid damages to the product.

⚠WARNING! Certain procedures must be followed to avoid damages to yourself, to the vehicle or to others.

1 ACCESSORIES

1 Headlight X1



2 Bracket X1



3 M6x20 Allen screw X2



4 M6x12 Allen screw X2



5 Bushing X2



6 Wiring harness X1

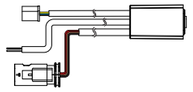

7 Male Crimp Connectors X2

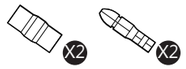

2 SPECIFICATIONS

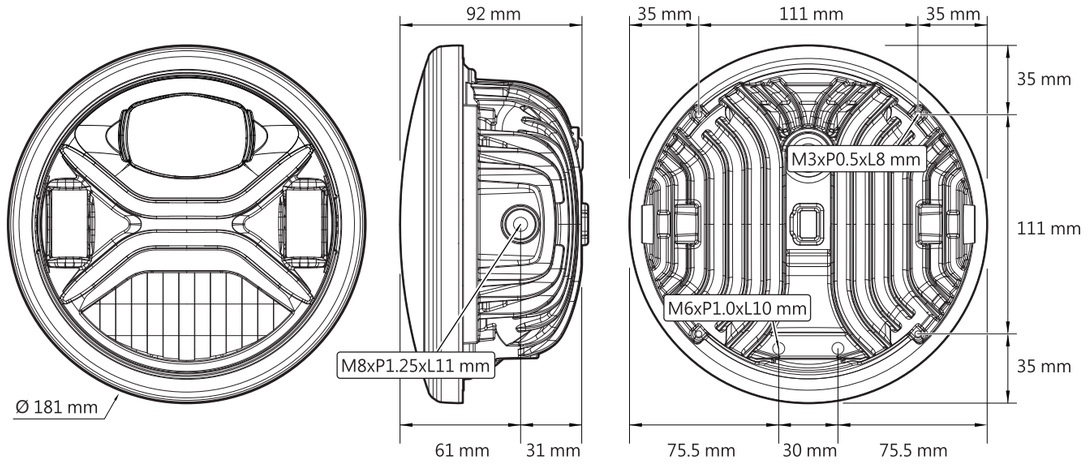

●Effective temperature range	-10 ~ 60 °C	●Effective voltage	DC 10 ~ 16 V
●Standard	JIS D 0203	○Front position	DC 12V / 2.7W
●Homologation	E-Mark / DOT Approved	○Low beam	DC 12V / 24.9W
●Size	Ø 181 X H 103.6 mm	○High beam	DC 12V / 20.2W
●Weight	± 1185 g		

NOTE Design and specifications are subject to change without notice.

3 Vehicle installation instructions

Remove the original headlight first and then proceed with the installation in order.

Installation Steps: ❶→❷→ Connect the wiring (Refer to the wiring instructions).

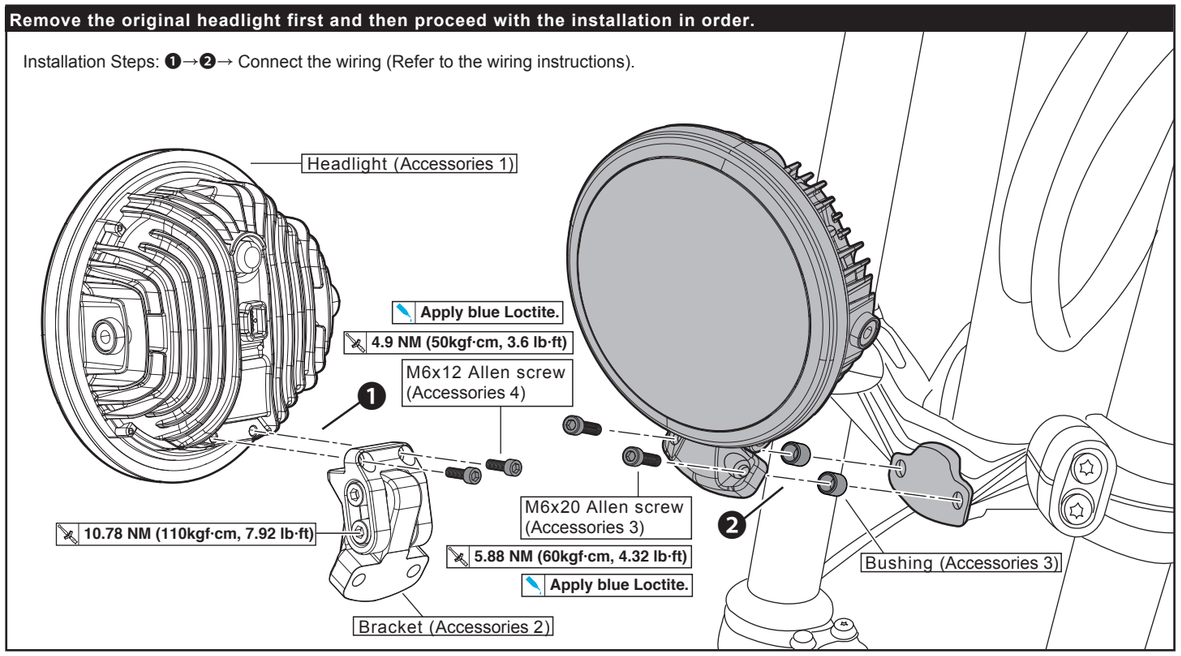

4 Wiring Installation Instructions

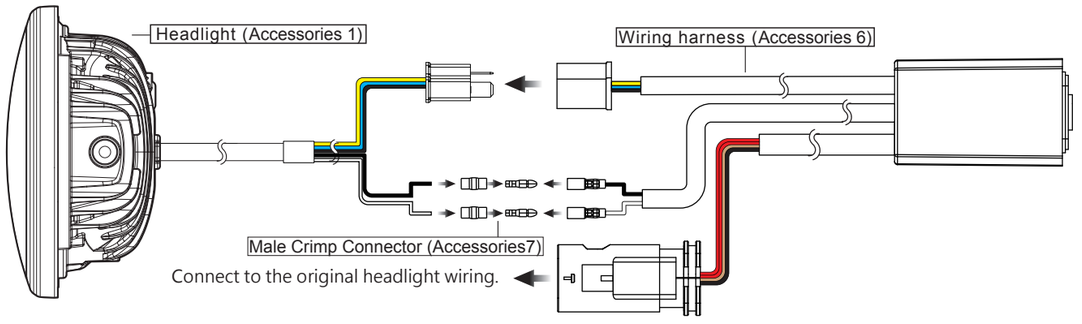

5 Headlight beam adjustment

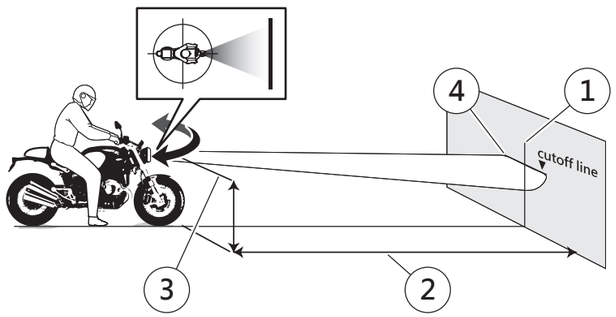

Adjustment specifications (refer to original BMW manual)

① Vertical line
② 25ft (7.6m)
③ low beam centerline
④ horizontal line

When the tire pressure is normal, have one person sit on the bike, move the bike to 25ft (7.6m) away from the wall. Measuring the height of the centerline of the low beam and drawing a responding horizontal line and a vertical line and it will create the cutoff line. The low beam needs to be lower than the cutoff line. Use bracket (accessory 2) to adjust headlight.

6 Troubleshooting

The following situations do not indicate malfunctions of the product. Check the following before taking it in for repair.

Trouble	Check item
No LED indicator lighting up.	●Power supply cable may be disconnected. →Check if power supply cable is broken or disconnected. →Check if positive and negative poles are properly connected.

※ If the problems still cannot be solved, contact our technical department for assistance.